Storci
PASTA MACHINERY

QUADRUCCI FORMING MACHINE

THE MOST INNOVATIVE ON THE MARKET

Quadrucci pasta machine

rev. 001087.2404.73

- Shaping unit for quadrucci in a range of sizes, with both smooth and zig-zag edges
- Interchangeable “tailor-made” cutting units for the most traditional shapes
- It can be integrated into existing lines

we know pasta

QUADRUCCI FORMING MACHINE

Shaping unit for quadrucci in a range of sizes, with both smooth and zig-zag edges, 100% stainless steel, accessible for maximum cleanliness. It can be integrated into existing lines and can interface with any PLC or be inverter-run.

Quadrucci forming machine - detail

Main technical features:

- Shaping unit for quadrucci in a range of sizes, with both smooth and zig-zag edges
- 100% stainless steel, accessible for maximum cleanliness
- It includes interchangeable “tailor-made” cutting units for the most traditional shapes, with two separate motor drives and safety microswitches
- It can be integrated into existing lines and can interface with any PLC or be inverter-run

Quadrucci forming machine on short pasta line

Detail of quadrucci

This document is generated automatically by Storci.com on 29/04/2024 12:24:52. Informations can change without notice. Please be sure to download the latest version.

QUADRUCCI FORMING MACHINE

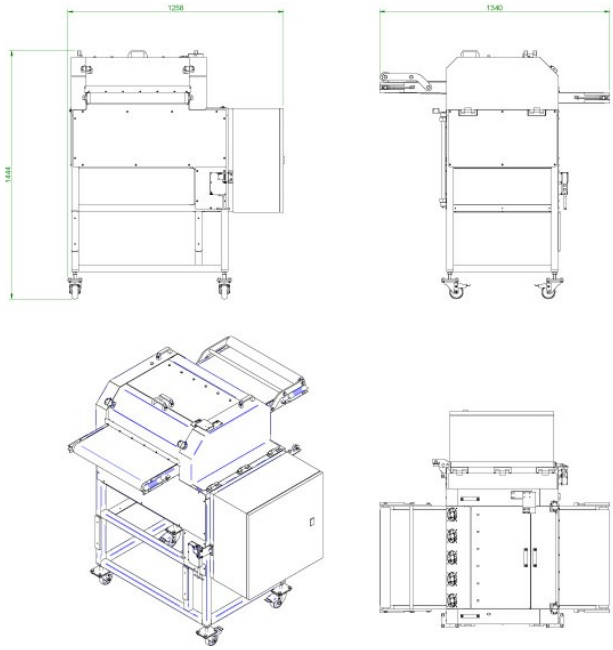

Quadrucci forming machine	
Dimensions	1258x1340x1444
Weight (Kg)	340
Installed power (kW)	0,92
Dry product (Kg/h)	200-250
Cuts	5x5 - 10x10
Edge	smooth/zig-zag

Dimension and technical data are not binding. Storci S.p.A. reserves the right to modify them without notice.

facebook.com/storci.spa

youtube.com/user/StorciPastaMachinery

linkedin.com/company/storci-spa

Storci S.p.A.
via Lemignano, 6 - 43044 Collecchio (Parma)
phone: +39 0521 543611 fax: +39 0521 543621
www.storci.com - sales-storci@storci.com

Storci
PASTA MACHINERY